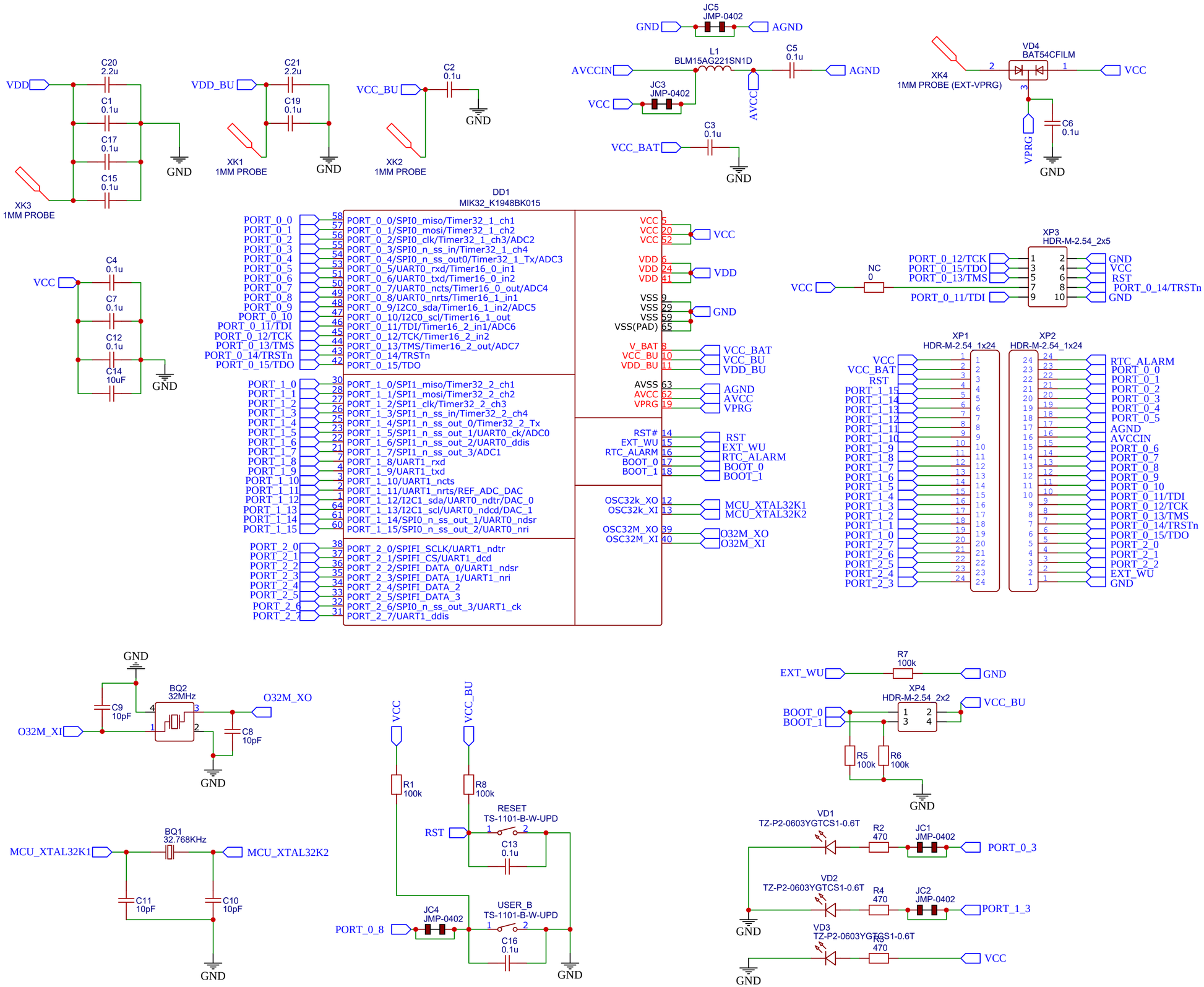
VDD
C20 2.2u
C1 0.1u
C17 0.1u
C15 0.1u
GND
XK3 1MM PROBE
VDD_BU
C21 2.2u
C19 0.1u
XK1 1MM PROBE
GND
VCC_BU
C2 0.1u
XK2 1MM PROBE
GND
GND
JC5 JMP-0402
AGND
AVCCIN
L1 BLM15AG221SN1D
C5 0.1u
AGND
VCC
JC3 JMP-0402
AVCC
VCC_BAT
C3 0.1u
GND
XK4 1MM PROBE (EXT-VPRG)
VD4 BAT54CFILM
VCC
VPRG
C6 0.1u
GND
VCC
C4 0.1u
C7 0.1u
C12 0.1u
C14 10uF
GND
DD1 MIK32_K1948BK015
PORT_0_0 PORT_0_1 PORT_0_2 PORT_0_3 PORT_0_4 PORT_0_5 PORT_0_6 PORT_0_7 PORT_0_8 PORT_0_9 PORT_0_10 PORT_0_11/TDI PORT_0_12/TCK PORT_0_13/TMS PORT_0_14/TRSTn PORT_0_15/TDO
PORT_0_0/SPI0_miso/Timer32_1_ch1
PORT_0_1/SPI0_mosi/Timer32_1_ch2
PORT_0_2/SPI0_clk/Timer32_1_ch3/ADC2
PORT_0_3/SPI0_n_ss_in/Timer32_1_ch4
PORT_0_4/SPI0_n_ss_out0/Timer32_1_Tx/ADC3
PORT_0_5/UART0_rxd/Timer16_0_in1
PORT_0_6/UART0_txd/Timer16_0_in2
PORT_0_7/UART0_ncts/Timer16_0_out/ADC4
PORT_0_8/UART0_nrts/Timer16_1_in1
PORT_0_9/I2C0_sda/Timer16_1_in2/ADC5
PORT_0_10/I2C0_scl/Timer16_1_out
PORT_0_11/TDI/Timer16_2_in1/ADC6
PORT_0_12/TCK/Timer16_2_in2
PORT_0_13/TMS/Timer16_2_out/ADC7
PORT_0_14/TRSTn
PORT_0_15/TDO
PORT_1_0 PORT_1_1 PORT_1_2 PORT_1_3 PORT_1_4 PORT_1_5 PORT_1_6 PORT_1_7 PORT_1_8 PORT_1_9 PORT_1_10 PORT_1_11 PORT_1_12 PORT_1_13 PORT_1_14 PORT_1_15
PORT_1_0/SPI1_miso/Timer32_2_ch1
PORT_1_1/SPI1_mosi/Timer32_2_ch2
PORT_1_2/SPI1_clk/Timer32_2_ch3
PORT_1_3/SPI1_n_ss_in/Timer32_2_ch4
PORT_1_4/SPI1_n_ss_out_0/Timer32_2_Tx
PORT_1_5/SPI1_n_ss_out_1/UART0_ck/ADC0
PORT_1_6/SPI1_n_ss_out_2/UART0_ddis
PORT_1_7/SPI1_n_ss_out_3/ADC1
PORT_1_8/UART1_rxd
PORT_1_9/UART1_txd
PORT_1_10/UART1_ncts
PORT_1_11/UART1_nrts/REF_ADC_DAC
PORT_1_12/I2C1_sda/UART0_ndtr/DAC_0
PORT_1_13/I2C1_scl/UART0_ndcd/DAC_1
PORT_1_14/SPI0_n_ss_out_1/UART0_ndsr
PORT_1_15/SPI0_n_ss_out_2/UART0_nri
PORT_2_0 PORT_2_1 PORT_2_2 PORT_2_3 PORT_2_4 PORT_2_5 PORT_2_6 PORT_2_7
PORT_2_0/SPIFI_SCLK/UART1_ndtr
PORT_2_1/SPIFI_CS/UART1_dcd
PORT_2_2/SPIFI_DATA_0/UART1_ndsr
PORT_2_3/SPIFI_DATA_1/UART1_nri
PORT_2_4/SPIFI_DATA_2
PORT_2_5/SPIFI_DATA_3
PORT_2_6/SPI0_n_ss_out_3/UART1_ck
PORT_2_7/UART1_ddis
VCC VCC VCC
VDD VDD VDD
VSS VSS VSS VSS(PAD)
GND
V_BAT VCC_BU VDD_BU
VCC_BAT VCC_BU VDD_BU
AVSS AVCC VPRG
AGND AVCC VPRG
RST# EXT_WU RTC_ALARM BOOT_0 BOOT_1
RST EXT_WU RTC_ALARM BOOT_0 BOOT_1
OSC32k_XO OSC32k_XI
MCU_XTAL32K1 MCU_XTAL32K2
OSC32M_XO OSC32M_XI
O32M_XO O32M_XI
XP3 HDR-M-2.54_2x5
VCC
NC 0
PORT_0_12/TCK PORT_0_15/TDO PORT_0_13/TMS PORT_0_11/TDI
GND VCC RST PORT_0_14/TRSTn GND
XP1 HDR-M-2.54_1x24
VCC VCC_BAT RST PORT_1_15 PORT_1_14 PORT_1_13 PORT_1_12 PORT_1_11 PORT_1_10 PORT_1_9 PORT_1_8 PORT_1_7 PORT_1_6 PORT_1_5 PORT_1_4 PORT_1_3 PORT_1_2 PORT_1_1 PORT_1_0 PORT_2_7 PORT_2_6 PORT_2_5 PORT_2_4 PORT_2_3
XP2 HDR-M-2.54_1x24
RTC_ALARM PORT_0_0 PORT_0_1 PORT_0_2 PORT_0_3 PORT_0_4 PORT_0_5 AGND AVCCIN PORT_0_6 PORT_0_7 PORT_0_8 PORT_0_9 PORT_0_10 PORT_0_11/TDI PORT_0_12/TCK PORT_0_13/TMS PORT_0_14/TRSTn PORT_0_15/TDO PORT_2_0 PORT_2_1 PORT_2_2 EXT_WU GND
GND
BQ2 32MHz
C9 10pF
C8 10pF
BQ1 32.768KHz
MCU_XTAL32K1
MCU_XTAL32K2
C11 10pF
C10 10pF
GND
VCC
VCC_BU
R1 100k
R8 100k
RESET TS-1101-B-W-UPD
RST
C13 0.1u
JC4 JMP-0402
PORT_0_8
USER_B TS-1101-B-W-UPD
C16 0.1u
GND
EXT_WU
R7 100k
GND
XP4 HDR-M-2.54_2x2
VCC_BU
BOOT_0 BOOT_1
R5 100k
R6 100k
GND
VD1 TZ-P2-0603YGTCS1-0.6T
R2 470
JC1 JMP-0402
PORT_0_3
VD2 TZ-P2-0603YGTCS1-0.6T
R4 470
JC2 JMP-0402
PORT_1_3
VD3 TZ-P2-0603YGTCS1-0.6T
R3 470
VCC
GND