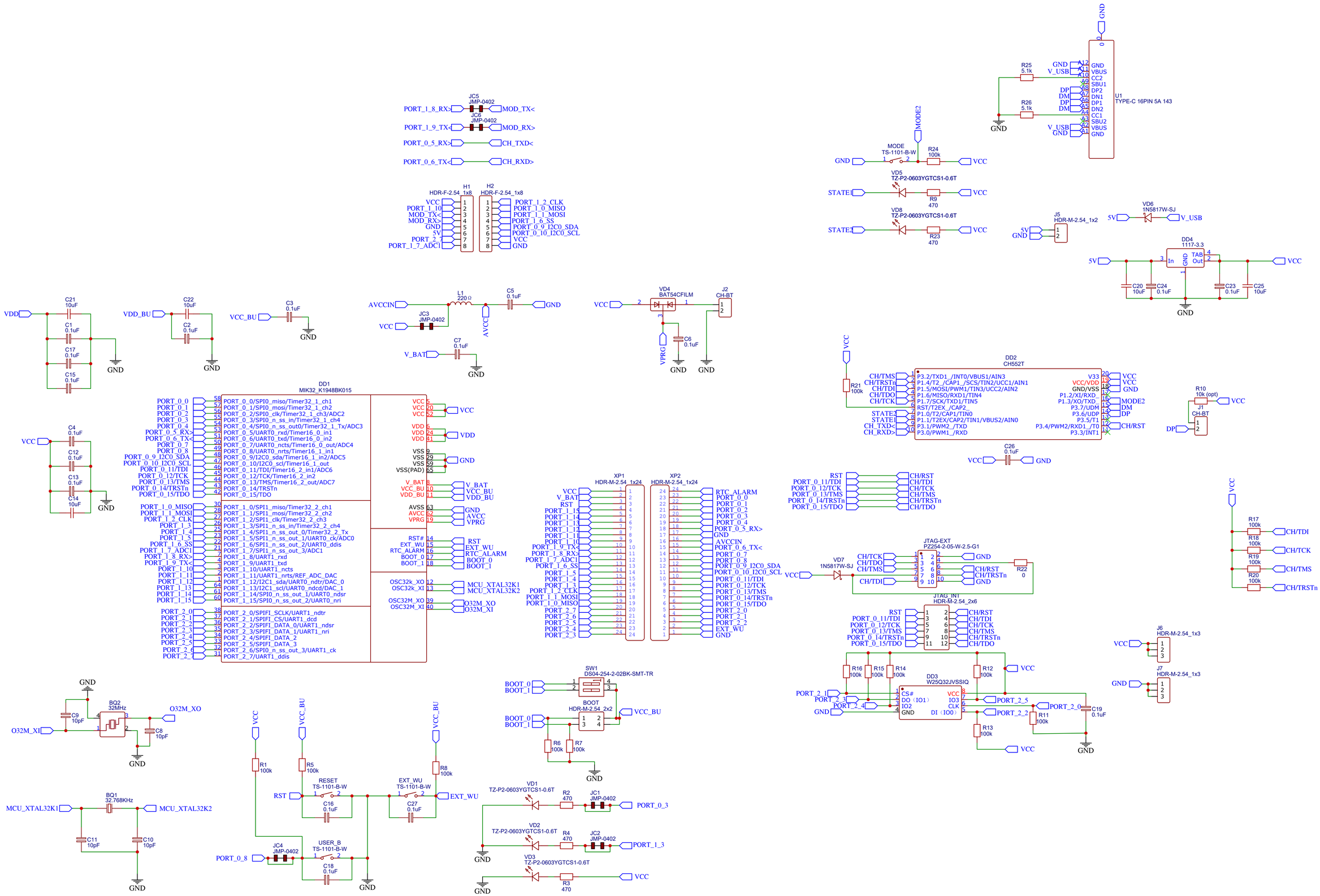
JC5 JMP-0402
PORT_1_8_RX>
MOD_TX<
JC6 JMP-0402
PORT_1_9_TX<
MOD_RX>
PORT_0_5_RX>
CH_TXD<
PORT_0_6_TX<
CH_RXD>
H1 HDR-F-2.54_1x8
H2 HDR-F-2.54_1x8
VCC
PORT_1_10
MOD_TX<
MOD_RX>
GND
5V
PORT_2_7
PORT_1_7_ADC1
PORT_1_2_CLK
PORT_1_0_MISO
PORT_1_1_MOSI
PORT_1_6_SS
PORT_0_9_I2C0_SDA
PORT_0_10_I2C0_SCL
VCC
GND
U1 TYPE-C 16PIN 5A 143
R25 5.1k
R26 5.1k
V_USB
DP
DM
MODE2
MODE TS-1101-B-W
R24 100k
VD5 TZ-P2-0603YGTCS1-0.6T
STATE1
R9 470
VD8 TZ-P2-0603YGTCS1-0.6T
STATE2
R23 470
J5 HDR-M-2.54_1x2
VD6 1N5817W-SJ
DD4 1117-3.3
In
Out
TAB
C20 10uF
C24 0.1uF
C23 0.1uF
C25 10uF
C21 10uF
C1 0.1uF
C17 0.1uF
C15 0.1uF
VDD
C22 10uF
C2 0.1uF
VDD_BU
C3 0.1uF
VCC_BU
AVCCIN
L1 220 Ω
C5 0.1uF
JC3 JMP-0402
AVCC
C7 0.1uF
V_BAT
VD4 BAT54CFILM
J2 CH-BT
C6 0.1uF
VPRG
DD1 MIK32_K1948BK015
PORT_0_0/SPI0_miso/Timer32_1_ch1
PORT_0_1/SPI0_mosi/Timer32_1_ch2
PORT_0_2/SPI0_clk/Timer32_1_ch3/ADC2
PORT_0_3/SPI0_n_ss_in/Timer32_1_ch4
PORT_0_4/SPI0_n_ss_out0/Timer32_1_Tx/ADC3
PORT_0_5/UART0_rxd/Timer16_0_in1
PORT_0_6/UART0_txd/Timer16_0_in2
PORT_0_7/UART0_ncts/Timer16_0_out/ADC4
PORT_0_8/UART0_nrts/Timer16_1_in1
PORT_0_9/I2C0_sda/Timer16_1_in2/ADC5
PORT_0_10/I2C0_scl/Timer16_1_out
PORT_0_11/TDI/Timer16_2_in1/ADC6
PORT_0_12/TCK/Timer16_2_in2
PORT_0_13/TMS/Timer16_2_out/ADC7
PORT_0_14/TRSTn
PORT_0_15/TDO
PORT_1_0/SPI1_miso/Timer32_2_ch1
PORT_1_1/SPI1_mosi/Timer32_2_ch2
PORT_1_2/SPI1_clk/Timer32_2_ch3
PORT_1_3/SPI1_n_ss_in/Timer32_2_ch4
PORT_1_4/SPI1_n_ss_out_0/Timer32_2_Tx
PORT_1_5/SPI1_n_ss_out_1/UART0_ck/ADC0
PORT_1_6/SPI1_n_ss_out_2/UART0_ddis
PORT_1_7/SPI1_n_ss_out_3/ADC1
PORT_1_8/UART1_rxd
PORT_1_9/UART1_txd
PORT_1_10/UART1_ncts
PORT_1_11/UART1_nrts/REF_ADC_DAC
PORT_1_12/I2C1_sda/UART0_ndtr/DAC_0
PORT_1_13/I2C1_scl/UART0_ndcd/DAC_1
PORT_1_14/SPI0_n_ss_out_1/UART0_ndsr
PORT_1_15/SPI0_n_ss_out_2/UART0_nri
PORT_2_0/SPIFI_SCLK/UART1_ndtr
PORT_2_1/SPIFI_CS/UART1_dcd
PORT_2_2/SPIFI_DATA_0/UART1_ndsr
PORT_2_3/SPIFI_DATA_1/UART1_nri
PORT_2_4/SPIFI_DATA_2
PORT_2_5/SPIFI_DATA_3
PORT_2_6/SPI0_n_ss_out_3/UART1_ck
PORT_2_7/UART1_ddis
VCC
VDD
GND
V_BAT
VCC_BU
VDD_BU
AVCC
VPRG
RST
EXT_WU
RTC_ALARM
BOOT_0
BOOT_I
MCU_XTAL32K1
MCU_XTAL32K2
O32M_XO
O32M_XI
XP1 HDR-M-2.54_1x24
XP2 HDR-M-2.54_1x24
RTC_ALARM
PORT_0_1
PORT_0_2
PORT_0_3
PORT_0_4
PORT_0_5_RX>
PORT_0_6_TX<
PORT_0_7
PORT_0_8
PORT_0_9_I2C0_SDA
PORT_0_10_I2C0_SCL
PORT_0_11/TDI
PORT_0_12/TCK
PORT_0_13/TMS
PORT_0_14/TRSTn
PORT_0_15/TDO
PORT_2_0
PORT_2_1
PORT_2_2
EXT_WU
DD2 CH552T
P3.2/TXD1_/INT0/VBUS1/AIN3
P1.4/T2_/CAP1_/SCS/TIN2/UCC1/AIN1
P1.5/MOSI/PWM1/TIN3/UCC2/AIN2
P1.6/MISO/RXD1/TIN4
P1.7/SCK/TXD1/TIN5
RST/T2EX_/CAP2_
P1.0/T2/CAP1/TIN0
P1.1/T2EX/CAP2/TIN1/VBUS2/AIN0
P3.1/PWM2_/TXD
P3.0/PWM1_/RXD
V33
VCC/VDD
GND/VSS
P1.2/XI/RXD_
P1.3/XO/TXD_
P3.7/UDM
P3.6/UDP
P3.5/T1
P3.4/PWM2/RXD1_/T0
P3.3/INT1
CH/TMS
CH/TRSTn
CH/TDI
CH/TDO
CH/TCK
STATE2
STATE1
CH_TXD<
CH_RXD>
R21 100k
CH/RST
MODE2
DM
DP
R10 10k (opt)
J1 CH-BT
C26 0.1uF
JTAG-EXT PZ254-2-05-W-2.5-G1
VD7 1N5817W-SJ
R22 0
JTAG_INT HDR-M-2.54_2x6
R17 100k
R18 100k
R19 100k
R20 100k
J6 HDR-M-2.54_1x3
J7 HDR-M-2.54_1x3
DD3 W25Q32JVSSIQ
CS#
DO（IO1）
IO2
GND
VCC
IO3
CLK
DI（IO0）
R16 100k
R15 100k
R14 100k
R12 100k
R13 100k
R11 100k
C19 0.1uF
C4 0.1uF
C12 0.1uF
C13 0.1uF
C14 10uF
C9 10pF
BQ2 32MHz
C8 10pF
BQ1 32.768KHz
C11 10pF
C10 10pF
R1 100k
R5 100k
R8 100k
RESET TS-1101-B-W
C16 0.1uF
EXT_WU TS-1101-B-W
C27 0.1uF
JC4 JMP-0402
USER_B TS-1101-B-W
C18 0.1uF
SW1 DS04-254-2-02BK-SMT-TR
BOOT HDR-M-2.54_2x2
R6 100k
R7 100k
VD1 TZ-P2-0603YGTCS1-0.6T
R2 470
JC1 JMP-0402
PORT_0_3
VD2 TZ-P2-0603YGTCS1-0.6T
R4 470
JC2 JMP-0402
PORT_1_3
VD3 TZ-P2-0603YGTCS1-0.6T
R3 470